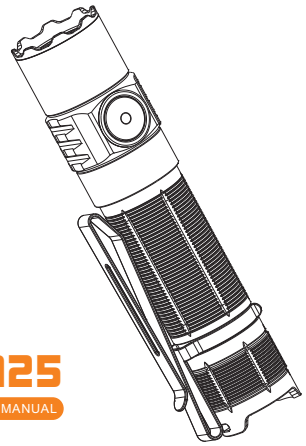

EA25

USER MANUAL

COMPACT FLASHLIGHT
3000 LUMENS MAXIMUM OUTPUT

Specifications

- 3000 lumens maximum output and 250 meters maximum beam distance.
- High performance LUMINUS SST70 LED.
- High-transmitting optical glass with AR coating.
- 21700-5000mAh USB rechargeable battery.
- Two-way clip.
- Modes: Turbo-High-Medium-Low-Eco and Strobe&SOS.
- Lock&unlock function
- Beacon guidance function.
- Power indication and low-voltage warning function.
- Dimensions: φ26.2*φ24.8*L126.2MM
- Weight: 75g(without battery)
- Accessories Included: 1*charging cable, 1*21700 USB rechargeable battery, 1* lanyard, 1* holster, 1* O-ring

EA25 Data

Mode	Turbo	High	Medium	Low	ECO	Strobe
OUTPUT	3000LM	800LM	300LM	150LM	10LM	3000LM
RUNTIME	2.6h	5.25h	14.2h	29h	227h	/
INTENSITY	15,577cd					
DISTANCE	250m					
IMPACT RESISTENCE	1m					
WATERPROOF	IPX-8					

Note: all datas above were generated in Fitorch lab. Differences may happen basing on usage and conditions.

Operation

- **On/Off**
  Click the side switch to turn on the light, and then press the side switch and hold on 0.5s to turn off the light.
- **Mode change:**
  when power on, click the side switch to cycle through Turbo-High-Medium-Low-Eco-Low-Medium-High-Turbo.
- **Strobe&SOS:**
  Double click the side switch to activate Strobe, and then double click the side switch again to enter SOS.
- **Lock&Unlock:**
  When power off, press the side switch and hold on 5s until the LED blinks, and then the light is locked.
  Click the side switch 3 times or 4 times quickly, and then click the switch 1 time to unlock the light.
- **Power Detection:**
  When the light is off, click the side switch 3 times quickly to activate the power detection function. The indicator light on the switch will blink to indicate the voltage. Each green blink indicates 1.0V, and each red blink indicates 0.1V.
- **Beacon Function:**
  When power off, click the side switch 4 times to activate Beacon function.
- **Charging**
  Take out Fitorch battery came with your flashlight, and then connect the charging port and the power source by charging cable. The indicator on the battery will be red during charging, and it will change to green after charging.

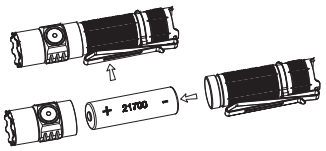

Usage and Maintenance

- Disassembling the sealed head will damage the lights and void the warranty.
- High quality batteries are recommended.
- O-ring will be wear after a Long-term use, change it In included spare one to maintain watertight seal.
- Unload the batteries if assure the light won't use a bit of long time, then better put It into Inner box(Built-in battery excluded).
- Store and keep the light off fire, statics, steaming and humidity surroundings.
- Clean the body with soft fabric clothing then lubricate In silicon grease per half a year.
- Periodic cleaning of batteries contacts to improve the flashlight performance as dirty contacts cause the lamp flicking, shine intermittently or even fail to illuminate for below factors(Built-in battery excluded).
  A: Battery needs replacing (choose the battery which mentions on this manual)
  B: PCB, Spring or other contacts is dirty (clean the contacts In cotton swab In soaked rubbing alcohol)

WARNING!

- Looking at the light for a long time will harm your eyes. Don't shine the light directly into anyone's eyes.
- The light will accumulate a lot of heat when used for extended periods, resulting in a high temperature of the light housing. Pay attention to safe use to avoid scalding.
- Do not shine the light to an object at close range to avoid burning the object or causing danger due to high temperature.
- The LED and battery of this light are not replaceable.

Warranty

- 15 days replacement: Fitorch will replace indentical or equal products with documented manufacturing defects within 15 days of purchase.
- 5-year free repair: This light is non-detachable and enjoy the service of 5-year free repair of purchase if problems happen in normal use. Rechargeable battery enjoys 1-year warranty.

Facebook

Website

ShenZhen Fitorch Electronics Technology Co., Ltd
Office Address:6F, Longsheng Commercial Building
Dalang St, Longhua new district
ShenZhen City, China
Tel: +86-755-2101-3606
Web: www.fitorchworld.com
E-mail: Info@fitorchworld.com

CE RoHS